White Paper

Unmanned Surface Vehicles/Vessel (USV)

Reliable Power and PropulsionArchitecture Characterization

ABB response to Solicitation N6449820R4046

Submitted to

NAVSEA, NSWC Philadelphia Div
derek.diep@navy.mil

Submitted by

Hansueli Krattiger
Technology Manager

ABB Inc.
Marine & Ports

1455 Pennsylvania Ave., NW
Suite 670
Washington, DC 20004

Tel 262 844 0174
hans.krattiger@us.abb.com

ABB is a pioneering technology leader in electrification products, robotics and motion, industrial automation and power grids, serving customers in utilities, industry and transport & infrastructure globally. ABB operates in more than 100 countries with about 135,000 employees with annual revenues of approximately $35B. ABB is well established in the United States with facilities and approximately 28,000 employees in the Americas region. See **https://new.abb.com/investorrelations/**

ABB Marine Systems Business Unit is the leading manufacturer of electric power and propulsion systems for ships. A global maritime organization with worldwide revenues of nearly $1.7B. See **https://new.abb.com/marine/**

ABB recommendation for the On Board Power System and Propulsion Architecture for New Construction USV Concept 1 or 2 is the Diesel Electric Ship featuring its Onboard DC Grid™ with Azipod® propulsors and ABB Ability™ controls.

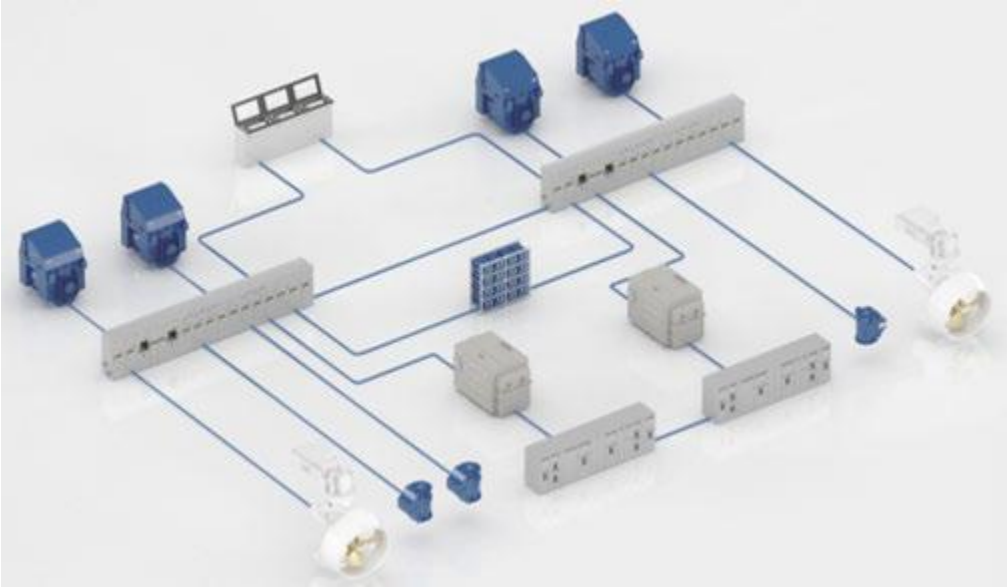

Figure 1 Diesel Electric Ship Power System with Onboard DC Grid™ and Energy Storage

1 Introduction

The Request For Information N6449820R4046 for "Unmanned Surface Vehicles/Vessel (USV) Reliable Power and Propulsion Architecture Characterization" seeks to leverage mature existing power and propulsion systems for consideration in unmanned naval applications. Such vessels performance requirements prescribe more-electric vessels with 1) ***electrical-power generation, -DC distribution and -propulsion***. This, because of these electrical systems inherent reconfiguration capabilities and vast amount of embedded sensors supporting optimal system operation. Such power electronic systems are highly suitable to be controlled by 2) ***advanced, intelligent controls for unmanned operation***.

ABB has tightly integrated these two technologies into a platform that is the basis for intelligent, unmanned marine vessels in this quickly developing market. This platform also enables the rapid deployment of incremental innovations derived from advances in Artificial Intelligence and Machine Learning. ABB's Onboard DC Grid™ product and ABB Ability™ Marine Pilot product family are introduced and proposed for the USV. This combination is very suitable for this application. Consisting of commercial products, the solution will be highly affordable for the Navy.

Figure 2 Some examples of ABB Unmanned/Autonomous (Control-) features in operation

This white paper addresses the power system and propulsion architecture aspects. References are made to controls features that allow for unmanned operation. Since the mission requires up to 90 days of unmanned operation, some thoughts to the reliability of redundant systems are presented, that impacts the power system and propulsion architecture. Three notional concepts are presented to capture the large size range of the two USV Concepts. The three concepts are scaled up variants of the same fundamental architecture for redundant systems with some added features required for unmanned missions. These proposed ABB systems for USV will provide greater mission capabilities with a more efficient energy consumption system that can translate into either A) more mission time or B) reduced fuel capacity required which frees up space for more mission deliverables.

While different propulsion concepts (diesel electric with shaftline, mechanical shaftline with shaft generator HED, etc.) are possible, an Integrated Power and Energy System IPES is superior. The IPES can be designed to meet any required reliability, and it consists of ABB Azipod® for its simplicity and highest possible propulsion reliability, Onboard DC Grid™ with Energy Storage, Azipod®, and the underlying advanced controls ABB Ability™ System 800xA. These systems are highlighted below.

In addition, since the commercial shipping industry is on it's path to „Autonomous Shipping", ABB is highly engaged to develop and insert into applications itsproduct and systems platforms to serve this market development. This has been sumarized in the ABB White Paper response the MUSV RFI. The statements

made and information in this White Paper MUSV Medium Unmanned Surface Vehicle N00024-19-6302 are still valid, and the document is attached in its entirety.

1.1 Onboard DC Grid™

See Figure 1 for a generic rendering of the Onboard DC Grid™ single line diagram. It is a system platform tailored to the needs of the next generation of vessels. It serves applications from low to mid-power range by offering a competitive, flexible and state-of-the-art system platform. It is especially well suited to the integration of variable speed generators, energy storage and new energy sources such as fuel cells in a safe, fault tolerant way. It is highly configurable, enabling a close fit for the simplest to the most demanding applications.

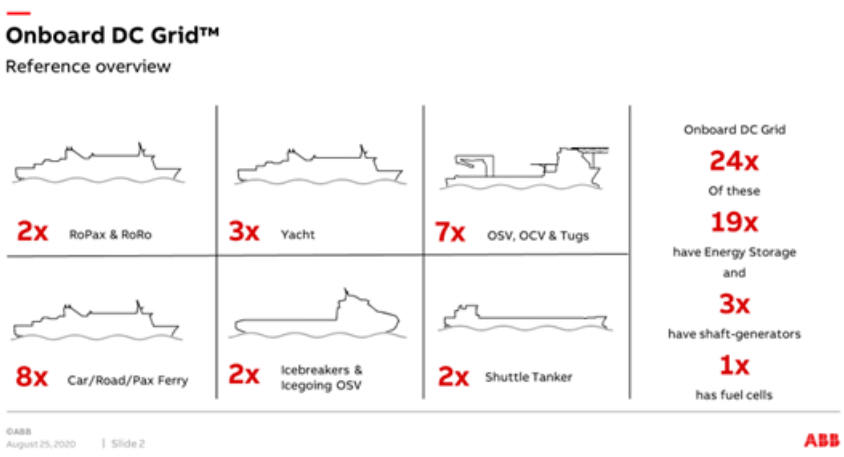

Figure 3

It is a modular power system platform comprising modules for sources and loads built using industry leading power and automation products. This approach reduces customer risk by enabling a high quality and efficient engineering process and post-delivery support whilst not forsaking necessary flexibility needed for a tailored application fit. Some of the main benefits include:

- Footprint reduction of up to 30%
- Variable speed generators for improved SFOC engine characteristic coupled with reduced emissions and maintenance and improved SCR performance
- Most efficient integration of energy storage/ fuel cells/shaft generators from perspective of cost, functionality and weight and footprint
- Best in class fault-tolerance is intrinsic to the design
- Highly controllable power plant suited for advanced operation and optimisation by overriding controls (Advisory)
- Unique DC distribution capability
- Unique remote diagnostic and service functionality

See https://new.abb.com/marine/marine/systems-and-solutions/power-generation-and-distribution/onboard-dc-grid for further details.

1.2 Azipod® Propulsion

Launched in 1990, Azipod technology marked a new era in ship propulsion. Since then, ABB's Azipod propulsion system has inspired naval architects to create more efficient and sustainable vessel designs.

Azipod propulsion is a pulling propulsion system where the electric drive motor is in a submerged pod outside the ship hull. The units can rotate 360 degrees to increase maneuverability and operating efficiency, with the proven ability to cut fuel consumption by up to 20 percent compared to traditional propulsion systems.

Azipod® propulsion key facts and figures

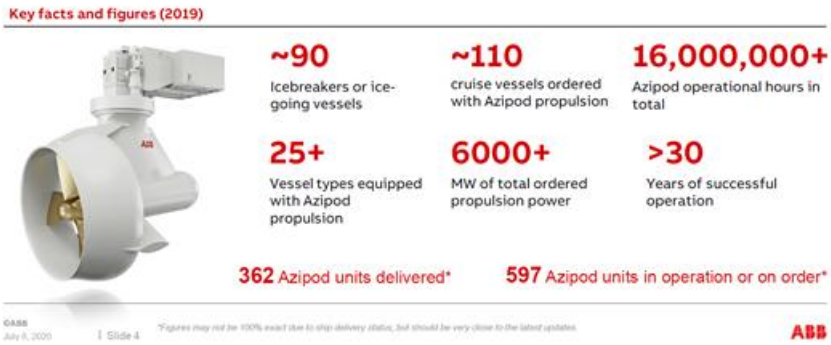

Figure 4

Azipod propulsion improves vessel safety, efficiency, maneuverability and performance. Vessels with Azipod® propulsion provides 99,9 % availability on average out of cumulative 18 million operating hours. Some of the key factors in achieving such performance include;

- Ability to predict abnormalities and take corrective actions to ensure continuous operations through state of the art remote diagnostic services (RDS)
- Robust and simple product design with the least amount of critical components in the market
- Access to spare parts needed to keep systems running throughout the lifetime of the vessel
- Continuous access to system expertise that is not available onboard to ensure continuous operations (24/7 technical support).

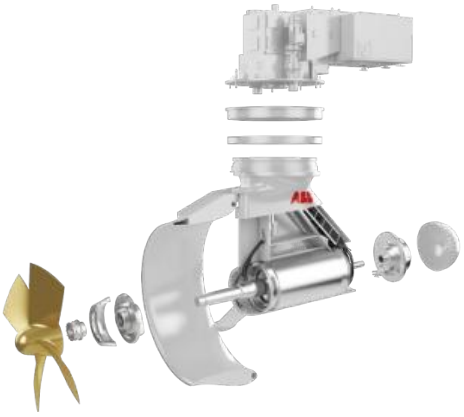

Figure 5

The smaller size Azipod® C and D series were developed to address the growing need for electrical systems and enhanced maneuvering and DP requirement in the smaller vessel segments. These units come in versions, an open water pulling propeller version and a ducted version with a pushing propeller for maximum thrust.

The Azipod® D series comes with the very latest Permanent Magnet (PM) motor technology developed by ABB. These motors have been optimized using today's mass-computing capacity and evolutionary algorithms to a) maximize electrical efficiency and b) minimize the use of expensive rare-earth elements needed to build strong permanent magnets. Electrical efficiency of 98 percent can be achieved.

All Azipod® designs are best-in-class propulsion products in terms of both risk of oil leakages and overall propulsion energy consumption. The main feature is the U.S. Vessel General Permit (VGP)] approved shaft seal design, eliminating any oil-water interface. The amount of oil used in a gearless Azipod® unit is only a fraction of that in geared mechanical azimuthing thrusters or traditional shaftline propulsion. Furthermore, fully electric Azipod® propulsion, with its small footprint for vessel general arrangement, makes it easier to utilize alternative power sources such as LNG, batteries or fuel cells.

The Azipod® D series is designed to be as simple as possible, ensuring robustness, reliability and easy maintenance for the crew, with all the active auxiliary components easily accessible in the pod room.

See https://new.abb.com/marine/systems-and-solutions/azipod for further details.

1.3 Controls - ABB Ability™ System 800xA

Advanced Controls, not the focus of this white paper, is an important enabler to build intelligent systems. ABB's ecosystem of control systems is used in all Industries served by ABB controls products. System 800xA works as the base platform for various ABB Marine system and product deliveries. Below Figure 6 is a visual placeholder for the important role advanced control systems play in running the advanced power and propulsion systems on board the vessels.

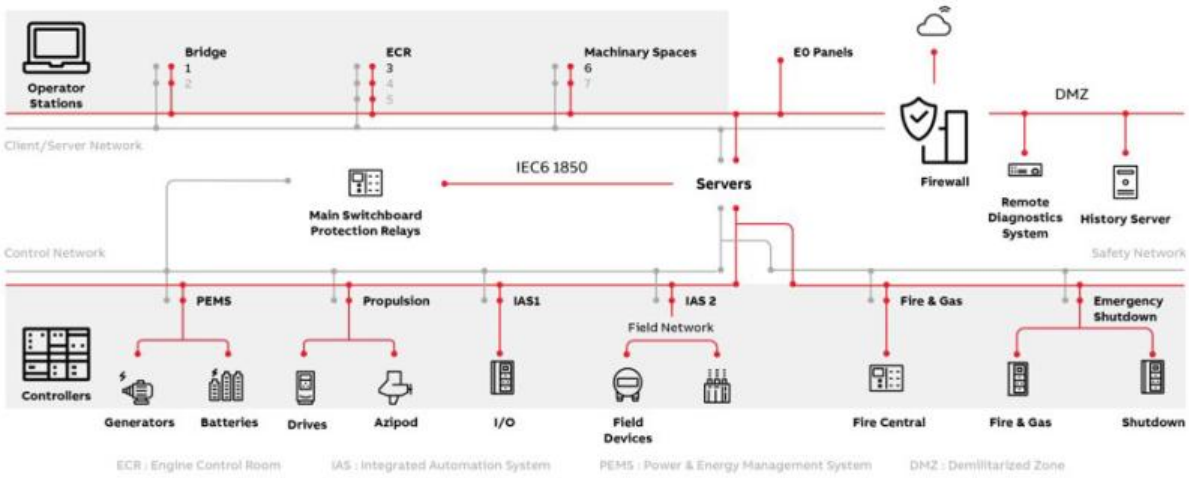

Figure 6

See the attachment for an overview of ABB Ability™ Digital Services & Solutions

https://new.abb.com/marine/systems-and-solutions/digital

2 Reliability Considerations for USV

The following high-level reliability deliberations are very basic, but they highlight the importance of redundancies and other measures that influences the overall reliability of the USV power systems and make it fit for mission durations lasting several months.

Shipboard power systems are usually designed with redundancies. So, in case of a failure of critical component of the shipboard power system, built in redundancies allow for continuation of the mission, while the crew can correct the failure, and restore full operation. If restoration is not possible, then the crew can decide to return to the port and correct the failure. On USV's there is no crew on board that can interact, repair and restore the failed component and either the mission needs to be terminated, or the mission continues without redundancies. If there is another fault, then the USV may lose power and propulsion, and the vessel may get lost.

The system reliability (probability of mission success), or availability expected, is usually well above 99%, typically it is expected to be 99.9%, or better. Achieving this high reliability is done with redundant systems, which is a sound approach for conventional vessels (crew on board) or USV. Excessive redundancies, while leading to required high reliability, are complex and cost prohibitive, and must be applied very carefully.

Calculating the reliability of power systems for conventional and USV, considering redundant subsystems, are done in a basic way, that allows us to design in certain features that will provide the required system reliability.

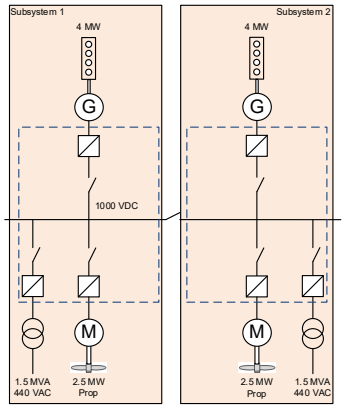

Figure 7 Basic power system consisting of identical subsystems

Figure 7 shows a basic ship power system consisting of two identical subsystems. In normal operation, the central breaker is closed, and in case of a fault in e.g. subsystem 1, this breaker is opened, and subsystem 2 continues to operate. Note, depending on system philosophy the central breaker may be closed, and one subsystem is running the loads, while the other subsystem is standby. From system reliability point of view this has no impact.

In Table 1 assumptions were made to calculate the system reliability for both cases, conventional and USV. The subsystem MTBF is assumes a low MTBF of 0.6 years to pronounce the differences, which seems low, however, it includes the marine diesel engine with all its auxiliaries, the power system and the propulsion string.

Table 1 Reliability calculation with basic subsystem MTBF

Conventional vessel, crew on board, system restoration is possible during mission	**USV, mission needs to continue for duration up to 90 days, before restoration can be performed**
Subsystem MTBF 0.6 year (Mean Time Before Failure) MTTR 10 hours (Mean Time To Repair)	Subsystem MTBF 0.6 year TM 3 month (Time to Maintenance)
System failure rate $\lambda = \frac{2 \cdot \lambda_0^2 \cdot \mathrm{MTTR}_0}{1 + 2 \cdot \lambda_0 \cdot \mathrm{MTTR}_0}$ Parallel redundant structure with two identical components, **repairable** during operation	System failure rate $\lambda = \frac{-\ln\left[e^{-\lambda_0 \cdot \mathrm{TM}}\left(2 - e^{-\lambda_0 \cdot \mathrm{TM}}\right)\right]}{\mathrm{TM}}$ Parallel redundant structure with two identical components, **non-repairable** during operation but for which redundancy is checked once per maintenance interval TM (restoration delay) and restored if necessary
System **MTBF=143 years**	System **MTBF=2 years**
Reliability 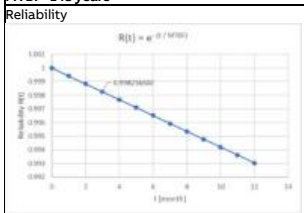	Reliability 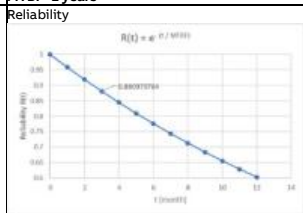
For vessels with crew the probability of success is almost 100%, which is acceptable. Of course, not all faults can be repaired while on the mission, but the majority can be done.	For the three months mission, the reliability, i.e. the probability of success is 88.1%, which is unacceptable. It should be well beyond 99%

For conventional systems the probability of success is almost 100% (0.998), which is acceptable. Of course, not all faults can be repaired while on the mission, but the majority can be done by crew interaction on board.

For the USV considering a three months mission, the reliability, i.e. the probability of success is 88.1%, which is unacceptable. It should be well beyond 99%. In order to improve the calculated system reliability, in this basic parallel redundant system, the only way to influenc is to substantially increase the subsytem reliability. Things that can be done are for instance:

- Redundant diesel engines
- Redundant communications and control systems
- Batteries
- Use motor operated switches for remote operation

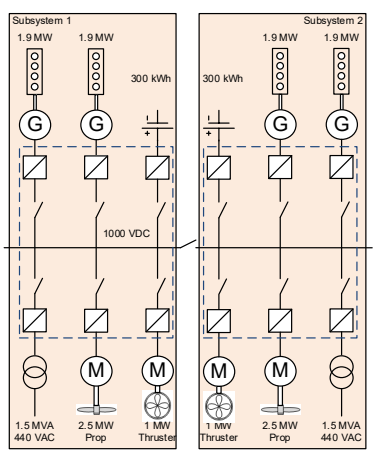

Figure 8 System with improved subsystem MTBF

Figure 8 shows the system with improved subsystem MTBF, i.e. redundant generator, added batteries. For the purpose of showing the impact to system reliability, the subsystem MTBF is assumed to double to 1.2 years.

In Table 2 the impact to the system reliability is calculated. While the conventional vessel reliability is better than 99.9%, the USV vessel improved to 96.4%, which is still far away from the required better than 99.9%.

Table 2 Reliability calculation with improved subsystem MTBF

Conventional vessel, crew on board, system restoration is possible during mission	**USV, mission needs to continue for duration up to 90 days, before restoration can be performed**
Subsystem MTBF 1.2 year (Mean Time Before Failure) MTTR 10 hour (Mean Time To Repair)	Subsystem MTBF 1.2 year TM 3 month (Time to Maintenance)
System failure rate $\lambda = \frac{2 \cdot \lambda_0^2 \cdot \mathrm{MTTR}_0}{1 + 2 \cdot \lambda_0 \cdot \mathrm{MTTR}_0}$ Parallel redundant structure with two identical components, **repairable** during operation	System failure rate $\lambda = \frac{-\ln\left[e^{-\lambda_0 \cdot \mathrm{TM}}\left(2 - e^{-\lambda_0 \cdot \mathrm{TM}}\right)\right]}{\mathrm{TM}}$ Parallel redundant structure with two identical components, **non-repairable** during operation but for which redundancy is checked once per maintenance interval TM (restoration delay) and restored if necessary
System **MTBF=572 years**	System **MTBF=6.8 years**
Reliability 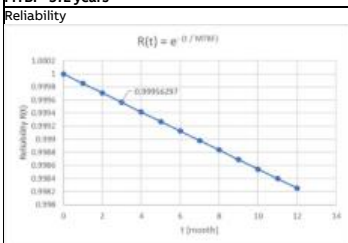	Reliability 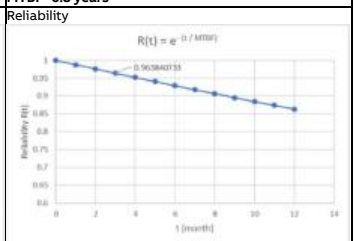
	With the higher subsystem reliability, the system reliability is now 96.4%, which is still too low. The reliability should be well above 99%

Figure 9 shows the system reliability as a function of the MTBF. The blue curve has 99.8%. To reach the desired 99.9% system reliability, the subsystem MTBF needs to be better than 7.6 years. This will be very difficult to achieve, as this will be cost prohibitive, e.g. triple redundancies (2 out of 3), etc.

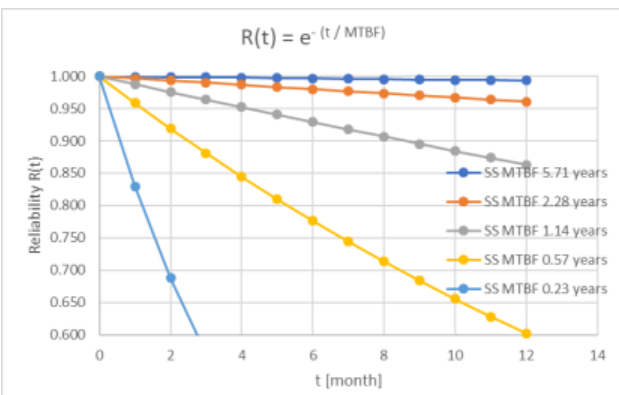

Figure 9 USV reliability as function of subsystem MTBF

Discussion:

1. In above simplified modelling for USV, the impact of subsystem MTBF improvement and its impact to the system reliability is shown. The subsystem modifications considered improve the subsystem MTBF while not excessively impacting size, weight and cost. Following this path further will not be sufficient to achieve the >99.9% system-reliability=f(TM, subsystem MTBF). TM, the mission duration is constant, and subsystem MTBF improvements have limits.

2. Further improvement of the system reliability is possible with implementing features to allow for "remotely repair" and restore the failed subsystem, such as healing or self-healing features in the

subsystem (and system). I.e. adopt reliability benefits for the conventional vessels, but perform repairs remotely or autonomous. When repair (restoration) is possible, the system-reliability=f(MTTR, subsystem MTBF). MTTR is short for most simple faults, and subsystem MTBF can be improved as reasonable as in 1. above

3. Architectural considerations that should improve the system reliability should be checked by system reliability modeling, detailed enough to see the impact on any such variation to the system reliability. These calculations will clearly show the relative benefits and allow for sound decisions in trade-off analysis exercises. Note, the absolute, calculated reliability figures depend on subjective MTBF, MTTR, and model details, and should not be taken as such absolute figures, But, based on same basis, such reliability calculations are very usefull in comparing different architectures.

For USV with mission durations of several months, power system design features that will improve the system reliability include:

- Motor, remotely operated switches, that allow the system to reconfigure, and just connect and energize the still healthy parts of the subsystem.
- Implementing a very robust and selective protection system, that just trips a faulty component of the system, while the remaining parts of the subsystem keep operating.
- Implementing design features that prohibit a single fault in one subsystem to impact the other subsystem. Design completely separate control systems for the subsystems. Eliminate single point failures that will impact both subsystems.
- Implement healing and self-healing features, that support self or remotely operated troubleshooting and reconfiguration. Allow for “bootstrapping” to re-initialize the subsystem remotely
- Allow degraded subsystems to operate in concert with the still healthy subsystem.

In conclusion, for a USV the usual shipboard power system architecture must be improved by increasing subsystem MTBF. And, self healing or remotely assisted healing features must be designed into the system. All these architectural considerations should be checked by system reliability modeling, detailed enough to see the impact on any architectural variation to the system reliability.

The provided design examples for USV Concept 1 and USV Concept 2, in chapters 4, 5 and 0, consider these features, i.e. motor operated switches, additional switches to separate faults, redundancy for the power plant, are visibly shown.

3 ABB Relevant References

While USV applications in the commercial industry are still rare but emerging, the underlying Reliable Power and Propulsion Architectures are configured to the specific application purpose and delivered for many years. Already Figure 3 shows the summary of references with the ABB Onboard DC Grid™ that has all features and capabilities to configure with redundancies and other features and achieve the required system availability for unmanned operation. A few references are mentioned below, with power systems designed for DPS-2 and DPS-3 redundancies, in different sizes. These systems are very much comparable the the USV requirements, with some additions as discussed.

Some ABB activities in the Unmanned and Autonomous field are mentioned in Figure 2. Interesting for its suite of sensors and controls required for unmanned, and autonomous operation, thABB autonomous tug-boat shold be mentioned. See https://www.seatrade-maritime.com/asia/keppel-abb-bring-autonomous-tug-operation-singapore-2020. The underlying power systems is not discussed further, as it was designed for different mission criteria for tug boats in/near ports.

Figure 10 ABB Autonomous Tug boat

1.4 Island Venture OCV

Island Venture

Vessel information

Vessel name:	Island Venture
Vessel Type:	IMR, ROV, Well Intervention
Design:	Ulstein SX165
Yard:	Ulstein Verft BN 302
Year:	2017
Class:	ABS DPS-3
Owner:	Island Ventures 5 LLC

Solution and scope: Advanced Power System

Generators:	4 x 3640kWe 900rpm and 2 x 2420ekW 900rpm
Swithboard:	3 x HV AC SWBD based Advanced Power System
Transformers:	5 x Distribution Transformers
Propulsion:	3 x 3300kW ACS800 Propulsion Drive System
Tunnel Thrusters:	2 x 2200kW ACS800 Tunnel Thruster Drive System
Retractable Thrusters:	2 x 2500kW ACS800 Retractable Thruster Drive System
Advisory:	ABB Ability™ Marine Remote Diagnostic System (RDS),

Project information

State-of-the-art subsea vessel including the newest ABB technology achieveing greater efficiency and precision.

ABB solution includes Advanced Power System that is a high integrity and optimum protection and control system that allows for closed bus-tie operation in the vessel's intended DP3 class operational modes.

Figure 11

This OCV was delivered I 2017. This is a vessel comparable to the USV Concept 2 performance requirements, with various redundancies and advanced features, that are considerations for USV. See https://ulstein.com/references/island-venture for more information from the vessel owner.

1.5 NKT Victoria Cable Layer

Another example of a vessel that features the systems as proposed for USV. See owner information for further details on this vessel. https://www.nkt.com/products-solutions/high-voltage-cable-solutions/nkt-victoria. The detailed single line diagram is included in this section for reference.

NKT Victoria is one of the world's most advanced and fuel-efficient cable-laying vessels with a fully redundant DP3 system and unique Onboard DC Grid™. Designed by industry leaders capturing NKT's extensive experience and expertise in submarine operations, the NKT Victoria is custom-built according to specifications. It comes equipped with all the features necessary to successfully perform even the most advanced installation procedures. The vessel has been developed by some of the most acknowledged industry leaders, including SALT Ship Design, MAATS, ABB Marine, and Kleven, ensuring highest flexibility and accuracy in installation execution.

NKT Victoria – Cable Layer

Vessel information

Vessel name:	NKT VICTORIA
Vessel Type:	Cable Layer
Design:	SALT 306 CLV
Yard:	Kleven Yard BN 372
Year:	2017
Class:	DNV-GL DynPos AUTRO (DP3)
Owner:	NKT

Solution and scope: Onboard DC Grid™

Generators:	6 x 2240kWe 1200-1800rpm
Energy Storage:	1 x 156kWh
Propulsion:	3 x 1.9MW Azipod® propulsion units
Thrusters:	3 x 1900kW ACS800 Tunnel Thruster Drive System
Automation:	PEMS with integrated VMS
Advisory:	ABB Ability™ Marine Remote Diagnostic System (RDS), Marine Advisory System – OCTOPUS, Condition Monitoring

Project information

State-of-the-art cable ship including the newest ABB technology achieveing greater efficiency and precision.

The vessel is custom built according to NKT's specifications and will measure approx. 140m-long and 30m wide, have capcacity for a crew of 100 and up to 9500 tonns of cargo. It will enhance the capacity of NKT's subsea cable operations while delivering optimum efficiency and accuracy.

Figure 12

The vessel is capable of simultaneous dual HVDC and fiber optic cable-laying and deep-sea HVAC installation with high capacity tensioner system. The two turntables have a combined capacity of massive 9000 ton, plus a 500 ton capacity fiber optic tank below deck.

To enable complete cable-lay capabilities ranging from the deep blue seas to shallow shores, NKT Victoria is designed to be beachable in fully laden condition. The vessel is also fitted with a 6-point mooring system to maneuver where most deep-sea cable layer would give up. For ultra-deep waters, the deck is prepared to accommodate a Vertical Lay Tower to enable sufficient high tension hold-back capabilities.

NKT Victoria is designed to the highest safety standard, in full compliance with the most stringent requirements. Her versatility is further strengthened by a fully integrated navigation and survey system. The many features onboard have been enabled by the ABB Octopus system, particularly managing weather windows to allow safe and efficient vessel operation in high sea states/waves. The offshore market's stringent safety requirements are met throughout the installation process thanks to sophisticated roll reduction technologies that mitigate the effects of harsh sea conditions. Fire and flooding containment systems protect essential systems, ensuring ongoing operations are not compromised. Advanced remotely operated vehicles (ROVs) equipped with cameras and sonar are used for subsea operations, while also contributing to increased safety.

Energy efficient operations is a key part of the NKT Victoria which uses a power-from-shore solution together with onboard technologies such as Azipod® propulsion units, an energy storage system for marine applications and ABB Marine's Onboard DC Grid™. This reduces fuel consumption significantly compared to other cable-laying vessels available on the market for any given project. The power-from-shore connection can be maintained while loading the cable onto the vessel – a unique advantage which results in a more environmentally-friendly operation.

1.5.1 Comments on the ABB scope:

In order to deliver the flexibility and reliability required for the unique operational profile of this vessel, ABB leveraged three innovative, but proven technologies, to meet the requirements. The first is the ABB Onboard DC Grid™ system (ODCG) which allows for the most efficient use of the energy onboard while also providing the flexibility to leverage the energy storage and shore connection capabilities of the vessel. ODCG provides the diesel engines the ability to run at variable speed since there is no requirement to sync up to a set frequency, this allow for very fast restarts if required in the 12-13 sec range and the variable speed allows the engines to operate at their most efficient point on the Specific Fuel Oil Curve. These factors are a significant part of the improved efficiency of the vessel. See details on measured fuel savings further below.

The second technical element that ABB leveraged for this vessel was the use of Azipod® propulsion units. The propulsion design of the vessel contributed to the improved maneuverability of the vessel and excellent performance while operating in DP mode. There is also a significant portion of the overall vessel efficiency that is derived from the use of the Azipod® propulsion units coupled with the hull design as seen in the attachment. The elimination of any additional gears with the electric motor directly on the propeller shaft is an important part of the improved efficiency and reduced maintenance costs. The other key factor is the hydrodynamic design of the hull with the Azipod® propulsion units contributing to the improved vessel efficiency.

The third piece of innovative but proven technology was the use of the ABB Octopus advisory system. This solution set offered the opportunity to more effectively manage some of the key operational aspects of the vessel. For example: Motion monitoring, Operation and response forecast, Monitoring of the environmental conditions, DP-forecast functionality, Helideck Motion Forecast and Helideck Monitoring System. The combination of these functions allows the vessel to stay on station in a safe operational environment longer while maintaining strict safety standards.

SHIP SPECIFICATIONS:

- LENGTH: 140 m
- BREADTH: 29.60 m
- DRAUGHT: 7.20 m
- DP CLASS: IMO DPIII
- ACCOMMODATION: 100 Pax
- DECK AREA: 1 600 m
- TURNTABLES:
    - 7 000 ton on main deck. 500 ton below deck

ABB Solution and scope: Electrical, Propulsion and Vessel Management

- Generators: 6 x 2240kWe 1200-1800rpm 6 x ABB Generators AMG0500LP, 2425kVA, 1200-1800rpm + ABB Rectifier, UNL 14300

- Energy Storage: 1 x 156kWh
- Propulsion: 3 x 1.9MW Azipod® propulsion units' type CZ0980-R1800E2-T0
- Thrusters: 3 x 1900kW ACS800 Drives + 3 x Motors AMI 500L6L VAFTMH, 1900kW, 750rpm, 690V
- Automation: Power & Energy Management System with integrated Vessel Management System
    - Power & Energy Management System (PEMS)
        - Fuel & Energy Management module, Power Plant Optimizer module, Sankey Diagram, SFOC Analyzer module
    - RDS - Remote Diagnostic System & CMS – Condition Monitoring System
        - Generators, DC-Grid system, Transformers, DCU, Thruster motors, Azipod® propulsion units
    - Octopus
        - Motion monitoring, Operation and response forecast, Monitoring of the environmental conditions, DP-forecast functionality, Helideck Motion Forecast and Helideck Monitoring System

1.5.2 NKT Victoria Operation Experience.

After the first year of operation of the vessel, the ship owner has provided operational feedback on experiences gained. See Figure 14 on a summary of system performance highlights. Clearly, this DC Grid architecture outperforms any other conventional AC distribution diesel electric architecture. For instance, the first diesel generator is on line in 12 s after a blackstart situation. And all generators are on line in 13 seconds. This due to the fact that in DC, ther is no synchronization to 60 Hz required, and the generators are running in adjustable speed

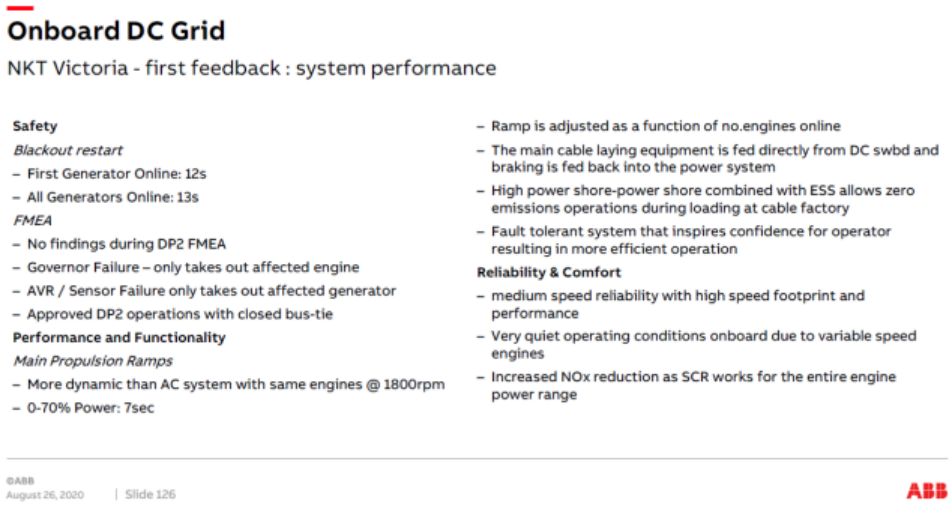

Figure 13

Of particular interest is the fuel savings evaluation that the ship owner was able to do, by comparing the NKT Victoria and one of its conventional Cable Layer vessel with the same capacity, in the same mission and operational environment. See Figure 15 for the summary. The presence of the onboard battery, together with the shore power connection allows for the operation of no or very limited amount of diesel power generation.

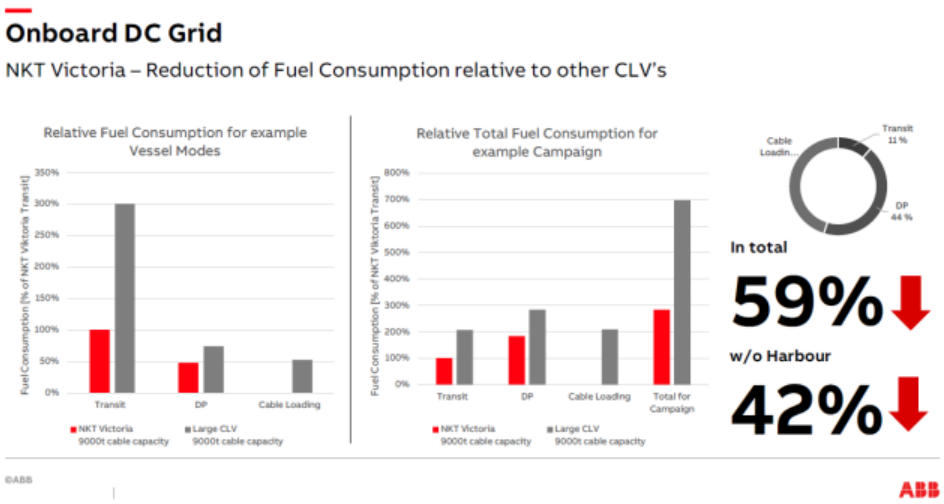

Figure 14

Figure 16 shows details on where the fuel savings are coming from. For instance while cable loading with the shore power connection the traditional vessel needed to run its diesel power plant in standby for required power redundancy. The Victoria, has battery energy storage to provide for this redundancy. So, while cable loading is a long process, for several days, fuel savings are apparent. Similarly, DPS-3 operation uses the battery for backup, for similar fuel savings while cable laying.

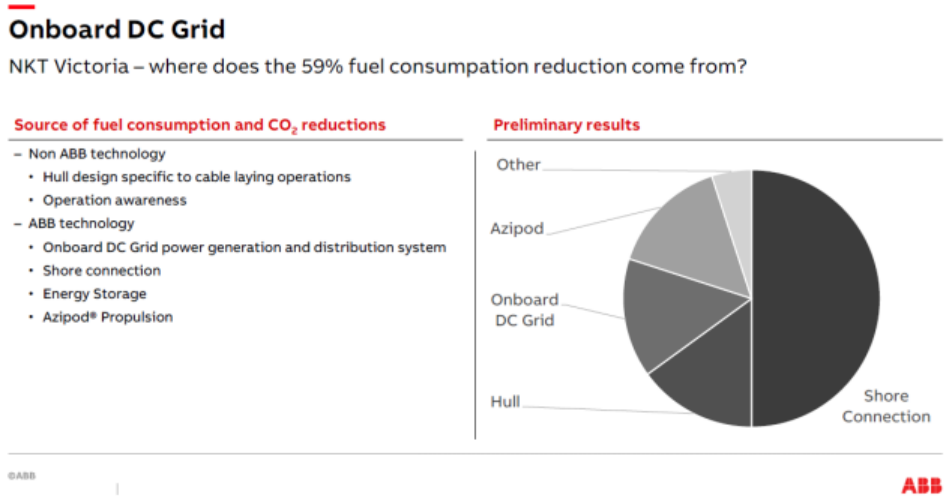

Figure 15

These fuel efficiency gains are highly relevant for the USV operation with the stated mission. Such significant savings will allow the USV vessels to prolong the mission with the same fuel capacity, or less fuel capacity needs to be installed which frees up space on the vessel for additional cargo.

1.5.3 NKT Victoria Single Line Diagram

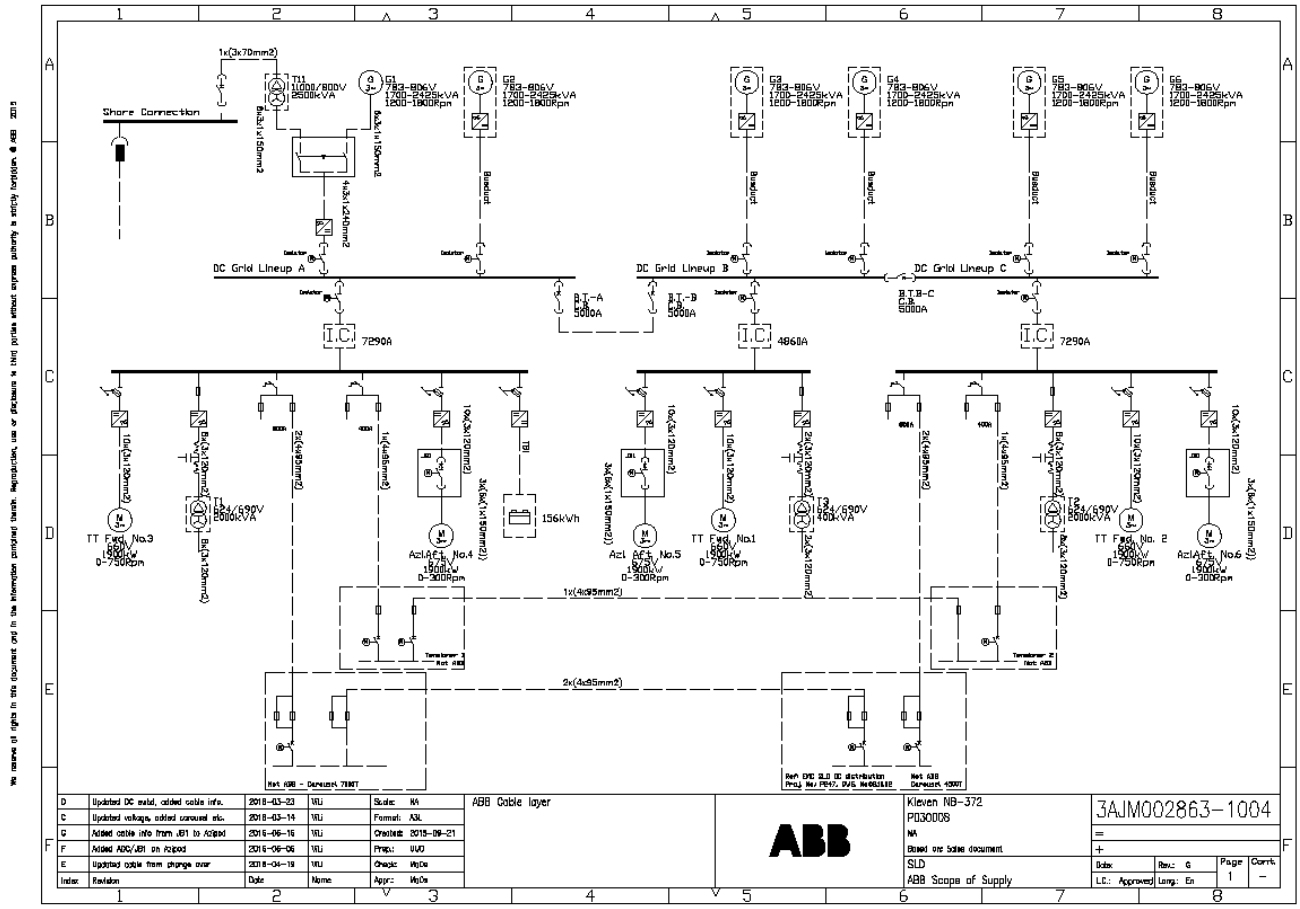

Figure 16 NKT Victoria Single Line Diagram – ABB Proprietary

1.6 AET Shuttle Tanker

While the previous two ABB references examples were for OSV applications, this example demonstrates the flexibility of the ABB Onboard DC Grid™ in an alternate, hybrid configuration with shaft generator, that could be a consideration for USV Concept 2, too. ABB's portfolio includes the complete range of conventional and advanced systems considered for USV's for any particular mission requirements

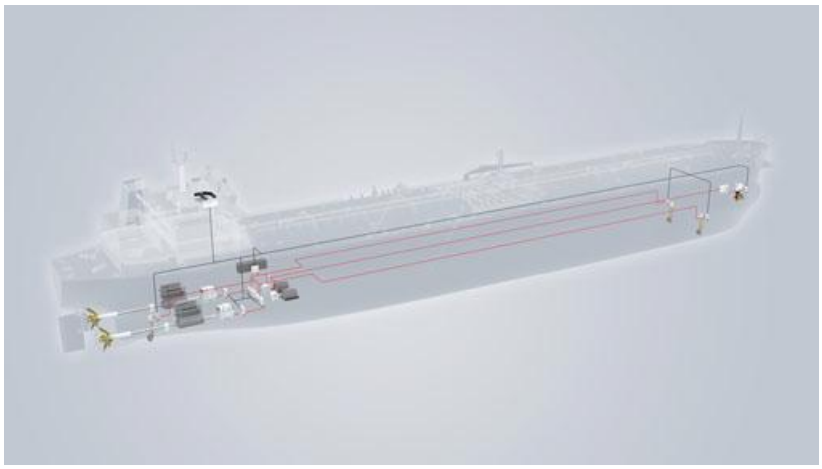

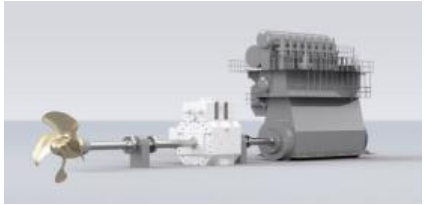

Figure 17

https://new.abb.com/news/detail/51628/abb-wins-contract-to-equip-two-next-generation-shuttle-tankers-with-future-proof-solutions

This DPS-2 vessel main propulsion is diesel-meachanic with shaft-generator for PTI/PTO as shown in Figure 17. The 4 MW shaft generators are tied into the Onboard DC Grid™ that provides for the auxiliary power distribution and includes a suite of thrusters (2xFwd Azimuth, 1xFwd Tunnel, and 1x Aft Azimuth) for DPS-2 operation. See the detailed single line diagram in Figure 18.

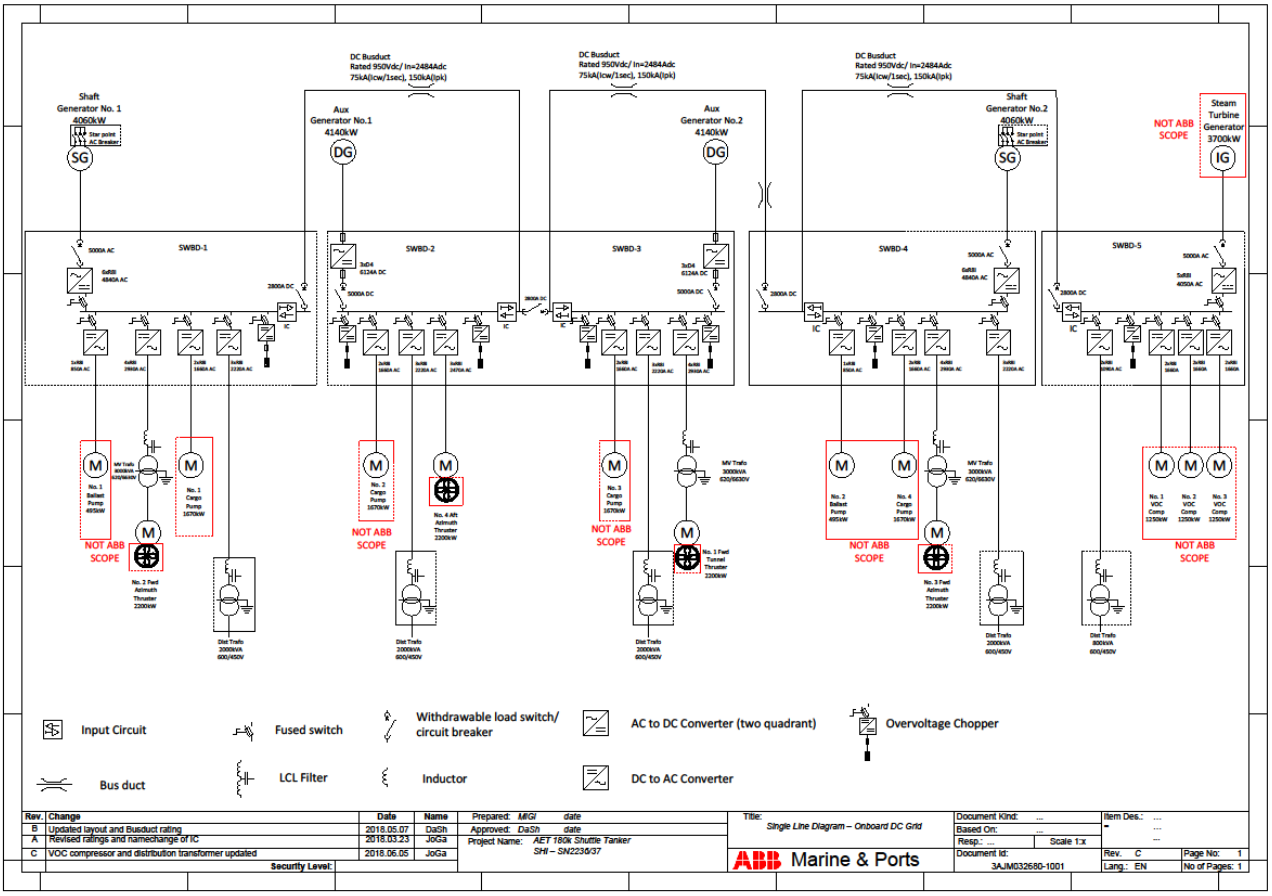

Figure 18 Shuttle Tanker Single Line Diagram – ABB Proprietary

4 USV Concept 1 - ABB Notional Design

5 MW Total propulsion power. While the underlying systems are fully scalable we picked a system at the lower end of the power range, with 2 x 2.5 MW propulsion power.

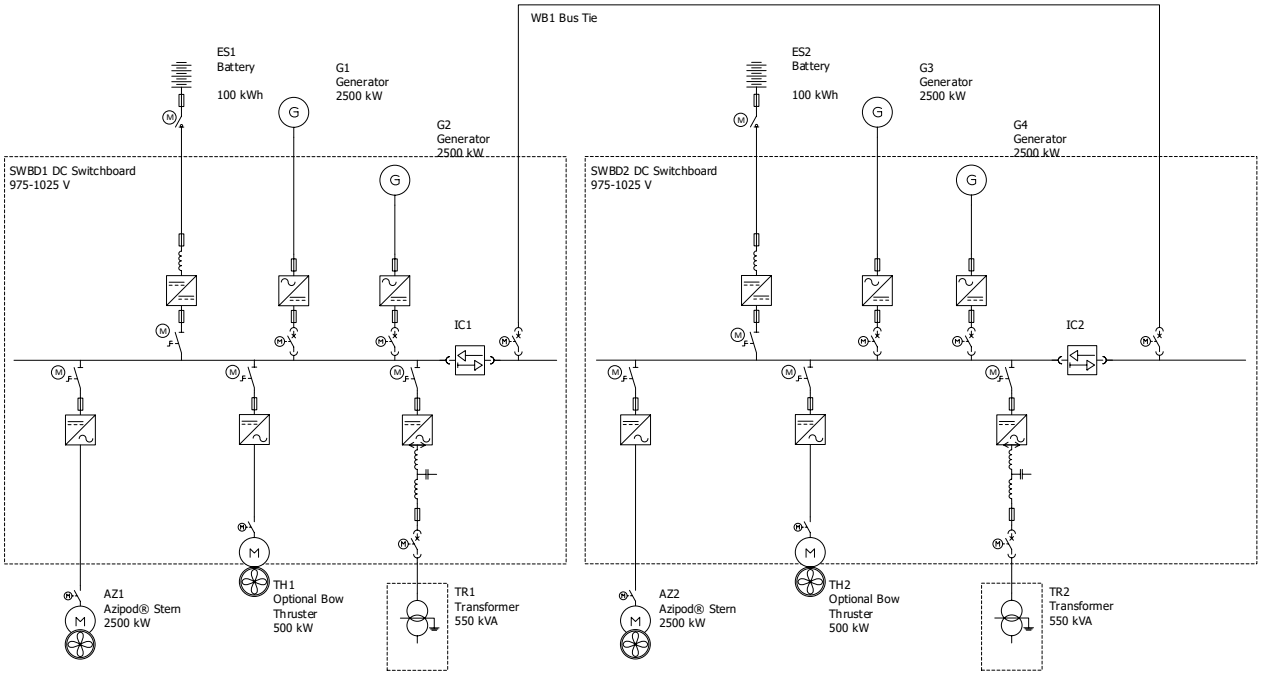

Figure 19 USV Concept 1 - 5 MW total propulsion power

Notes

1. The considered redundancy features, redundant generators, motor operated switches, and the additional tie breaker switch for better separation of the two systems. And, the two batteries. The tie breakers are closed in normal operation.
2. In case of a diesel engine/generator failure in either subsystem, the vessel will maintain full propulsion performance. In case of a propulsor or its associated drive failure, the vessel propulsion performance will reduce to 2.5 MW, for degraded output performance. If the output performance need to remain, then the size of the propulsors and drives, in addition to the size of the powerplant need to be adjusted accordingly.
3. Small batteries are included to provide operational flexibility, and to allow for optimal fuel efficiency for the USV mission profile as stated.
4. The auxiliary power distribution is not shown. Redundant feeds are provided, see the ship service transformers T1 and T2.
5. For black start situations, a single emergency diesel generator EDG and “bootstrap” power distribution and controls could be proposed as backup system for black start during the mission. It should be noted that this EDG is not necessary when evaluating mission system reliability, as the system has the reliability and enough energy stored in its redundant batteries. However, considered as back up the EDG and its supporting system for black start makes always sense, and will be hard to

eliminate. Also, EDG could be used before the mission start as alternative to “shore” connection” for a autonomous black start before mission start.

5 USV Concept 2 - ABB Notional Design, Version 1

10 MW Total propulsion power. For this concept, the same fundamental architecture as in the previous chapter 4 is scaled up for 10 MW total propulsion power. This configuration has three generators per subsystem, for slightly different reliability characteristics.

All other comments in the previous chapter are applicable here as well

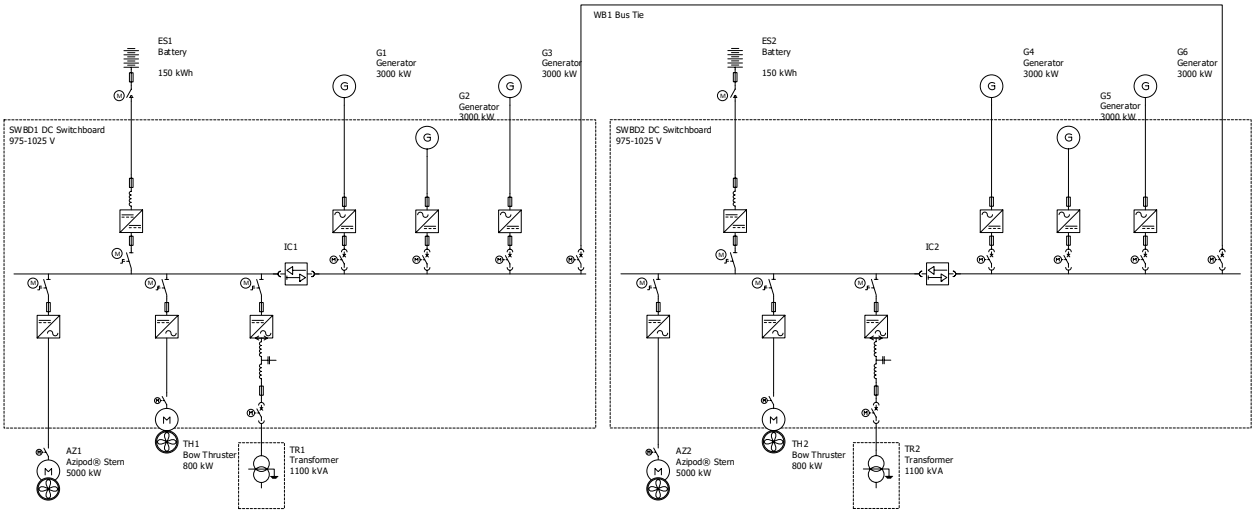

Figure 20 USV Concept 2 - 10 MW total propulsion power

6 USV Concept 2 - ABB Notional Design, Version 2

10 MW Total propulsion power. And here is a second version with total 20 MW propulsion power. This is achieved with two stern 5 MW Azipod® units, and a center shaft line with 10 MW. The installed power generation is 8 x 4 MW for 32 MW total. Again, the reliability calculation will be a little different, but fundamentally this system shown consists of two identical subsystems, with all MTBF improvements as discussed earlier in the document

All other comments from chapter 4 are applicable here as well

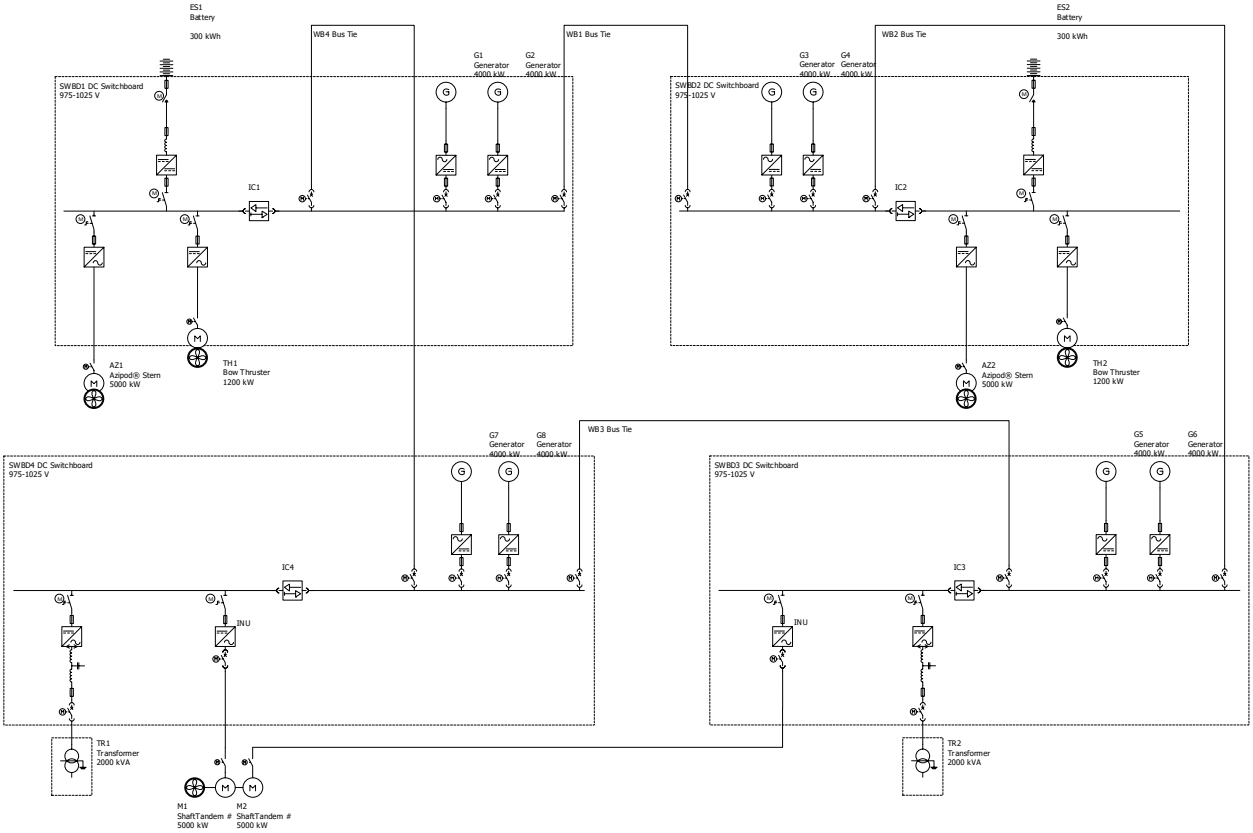

Figure 21 USV Concept 2 - 20 MW total propulsion power

Comments:

Notional Architectures for the performance ratings for USV Concept 1 and 2 have been proposed, based on the ABB Onboard DC Grid™. While fully scalable , the flexibility of this system can virtually be designed to meet any specified system reliability.

ABB also offer Medium Voltage Marine Drives products. Similar notional architectures could be developed using ABB's widely used MV Multidrive ACS6000.

7 Attachments

ABB Ability™ Digital Services & Solutions

White Paper MUSV Medium Unmanned Surface Vehicle N00024-19-6302

8 References

https://new.abb.com/marine

https://new.abb.com/marine/systems-and-solutions/electric-solutions

https://new.abb.com/marine/marine/systems-and-solutions/power-generation-and-distribution/onboard-dc-grid

https://new.abb.com/marine/systems-and-solutions/azipod

https://new.abb.com/marine/systems-and-solutions/digital